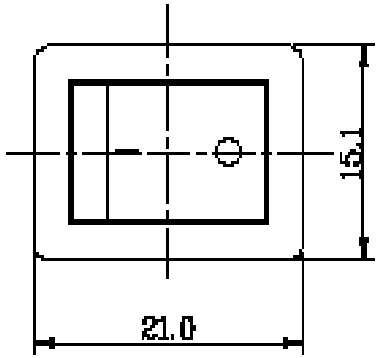

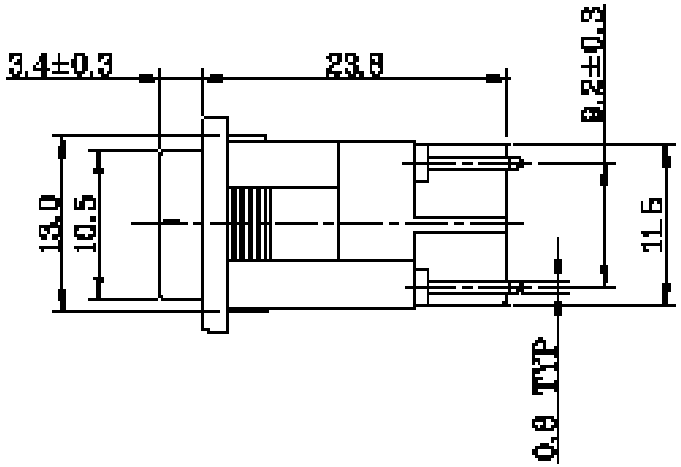

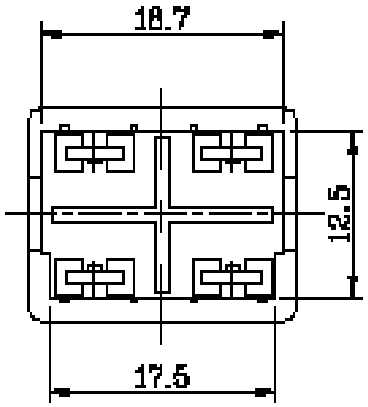

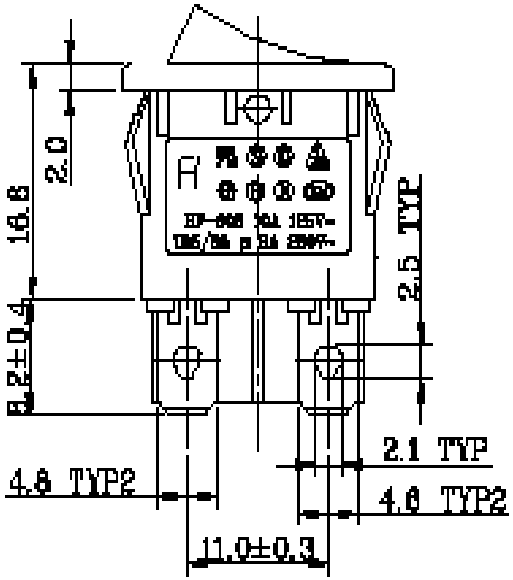

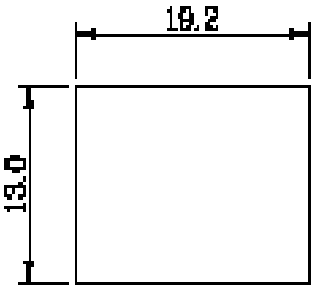

PANEL CUT-OUT

SPECIFICATION:
CONTACT RATING: 6A/250VAC, 10A/125VAC
APPROVAL: UL CERTIFICATE: E 128307(S)
CSA CERTIFICATE: LR 90681-10
VDE CERTIFICATE: 15739-4401-7006
CONTACT RESISTANCE: 50mΩ(MAX)
INSULATION RESISTANCE: 100mΩ(MIN)500VDC
WITHSTAND VOLTAGE: 1000VAC-1 MINUTE
RATED TEMPERATURE: -25°C~65°C
OPERATION FORCE: 650±200GRAM
OPERATING LIFE: 10,000 CYCLES
NO NEON LAMP TYPE
(Black color actuator w/white words printed)

UNIT : mm

REVISION	APPROVAL	Ho Chien Enterprise Co. Ltd.						
		0~10 ±0.1 ; 10~30 ±0.3 ; 30~100 ±0.5						TECX0003
		DRAWN BY		APPROVAL BY		SCALE	Free	NAME	ROCK SWITCH
		CHECKED BY		DATE	2002.11.19				HF-606PBBB