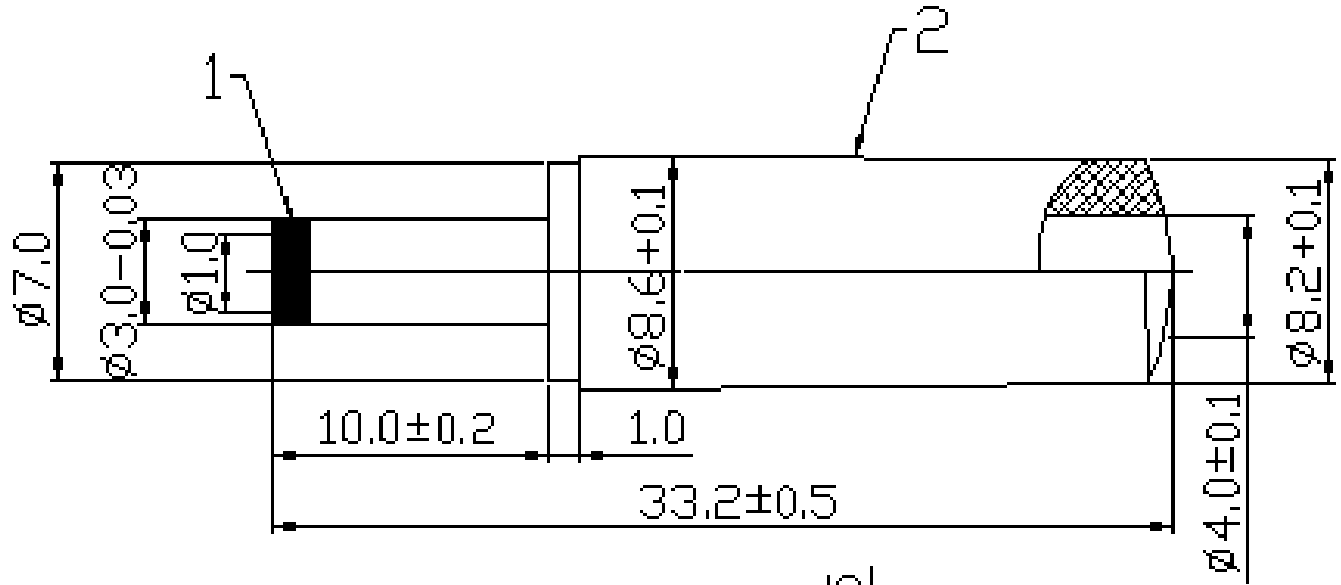

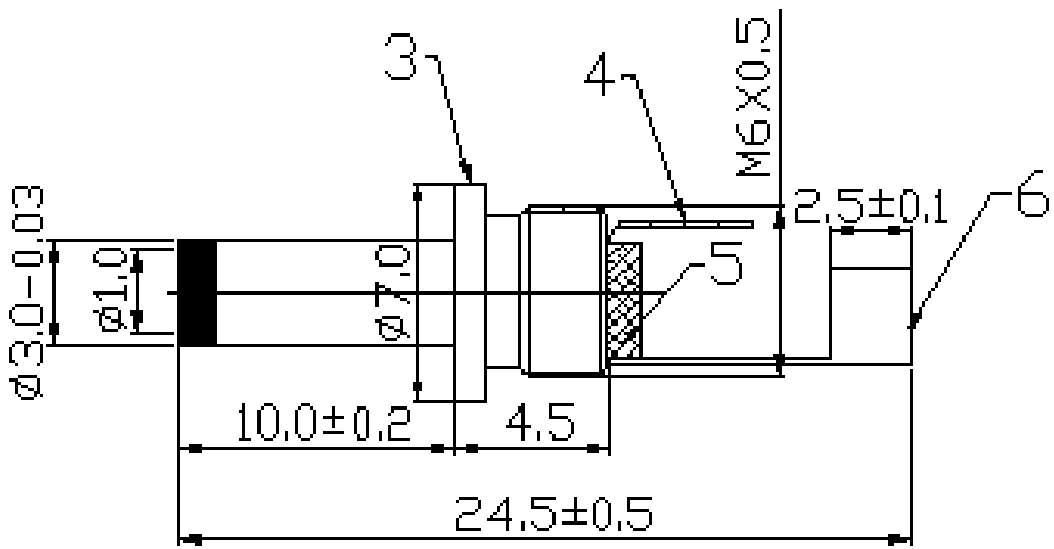

6	CRIMPING PATCH	Cu
5	DIELECTRIC	POM
4	SOLDERING PATCH	Cu
3	BODY	Cu
2	PLASTIC HANDLE	ABS
1	DIELECTRIC	POM
ITEM	DESIGNATION	MATERIAL

TOLERANCE	SIGNATURES		DATE
±0.05 ±0.5 ±0.10 ±0.00 ±0.000	DRAFT: YangYongRui		05.10.25
	CHECKED: HuGongXue		
	APPROVAL:		
SHEET	SCALE	UNIT	REV
OF	1:1	mm	ø

HO CHIEN
www.hochien.com

REV	PART NO. & SAMPLE NO.	DATE	BY
A	JR-1847		
B			

TITLE: DC Plug 1.0X3.0X10mm Bakelite

CUSTOMER